LONGWELL
Turn to Experts - HVAC

AC Forward Centrifugal Blower

Product Characteristic

∅133

- Type of Protection : IP54
- Insulation Class: “B” “F”
- Mode of operation: S1
- Bearings: Maintenance-free ball bearings
- Blades: Galvanized sheet
- Perm.amb.temp: -40~+60℃

Flow Rate Curve

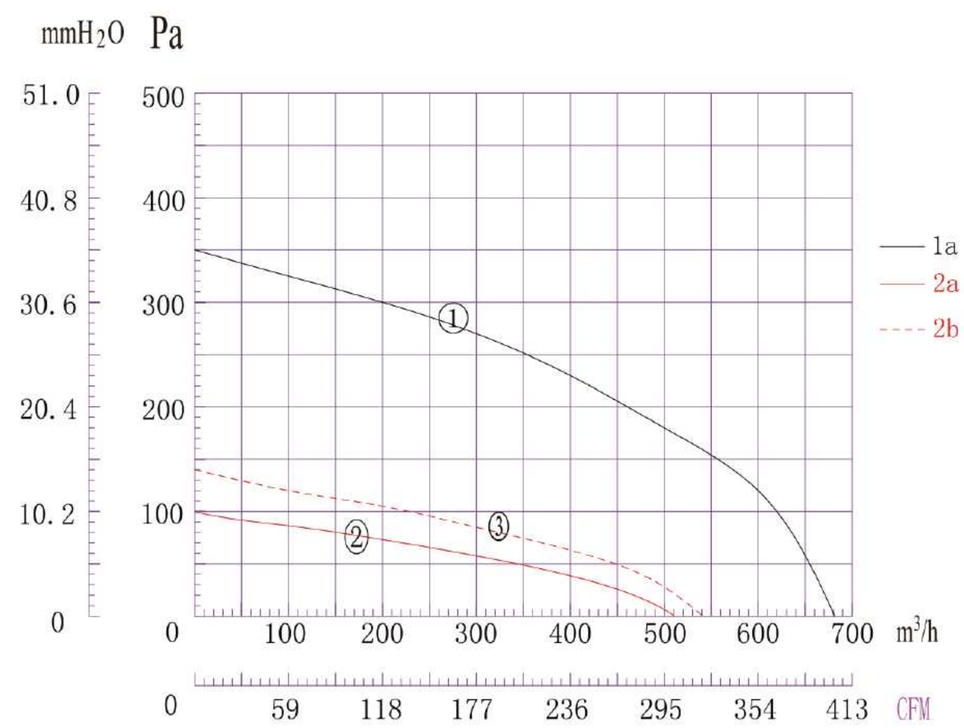

Product Drawing

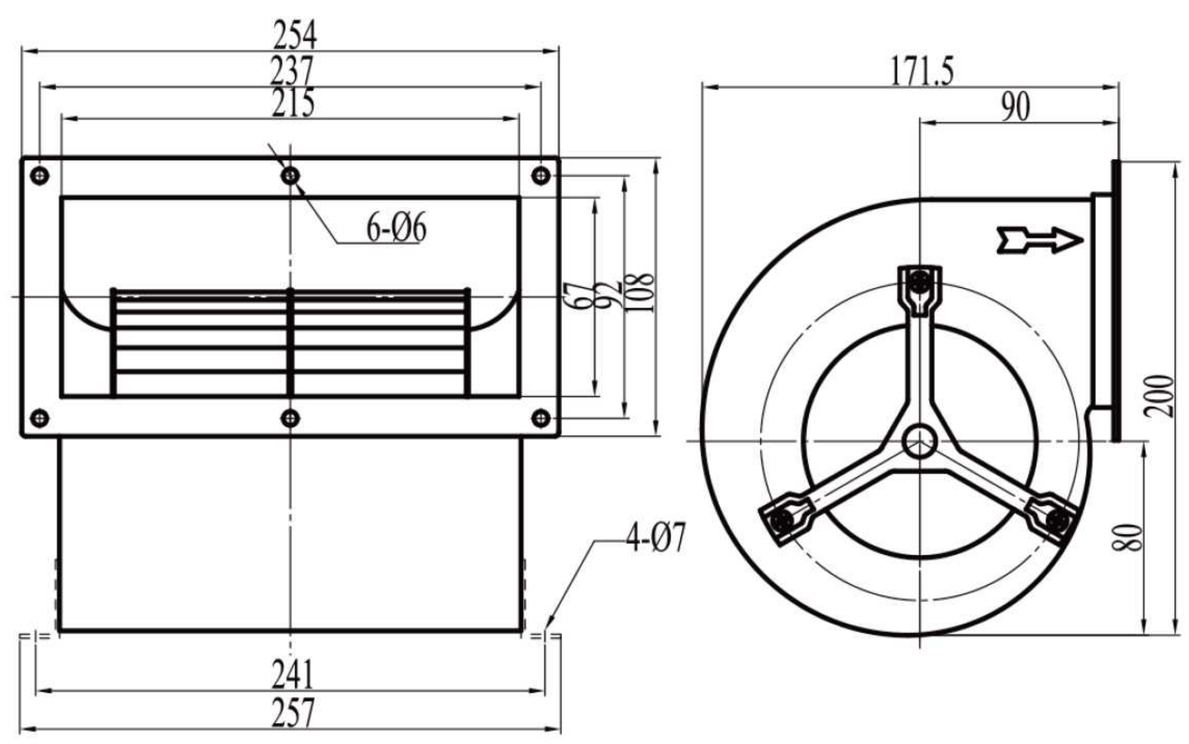

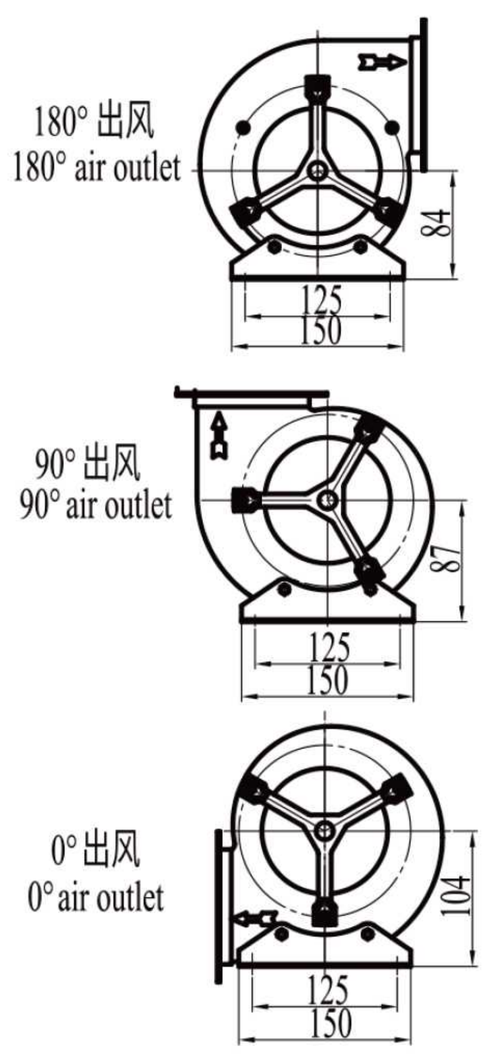

Technical Specifications

Model	Voltage	Frequency	Current	Power	Speed	Air Flow	Noise Level	Capacitor	Curve
LWFA2E-133DS-01	220V	50Hz	1.30A	280W	1950RPM	680m³/h	60dB(A)	8μF	①
LWFA4E-133DS-02	220V	50Hz	0.35A	70W	1380RPM	510m³/h	53dB(A)	2μF	②
LWFA4E-133DS-03	230V	60Hz	0.40A	90W	1650RPM	540m³/h	55dB(A)	2μF	③

Ningbo Longwell Electric Technology CO, LTD
https://zjlongwell.en.alibaba.com TEL:+0086 183 5827 4663

AC Forward Centrifugal Blower

Product Characteristic

∅133

- Type of Protection : IP54
- Insulation Class: “B” “F”
- Mode of operation: S1
- Bearings: Maintenance-free ball bearings
- Blades: Galvanized sheet
- Perm.amb.temp: -40~+60℃

Flow Rate Curve

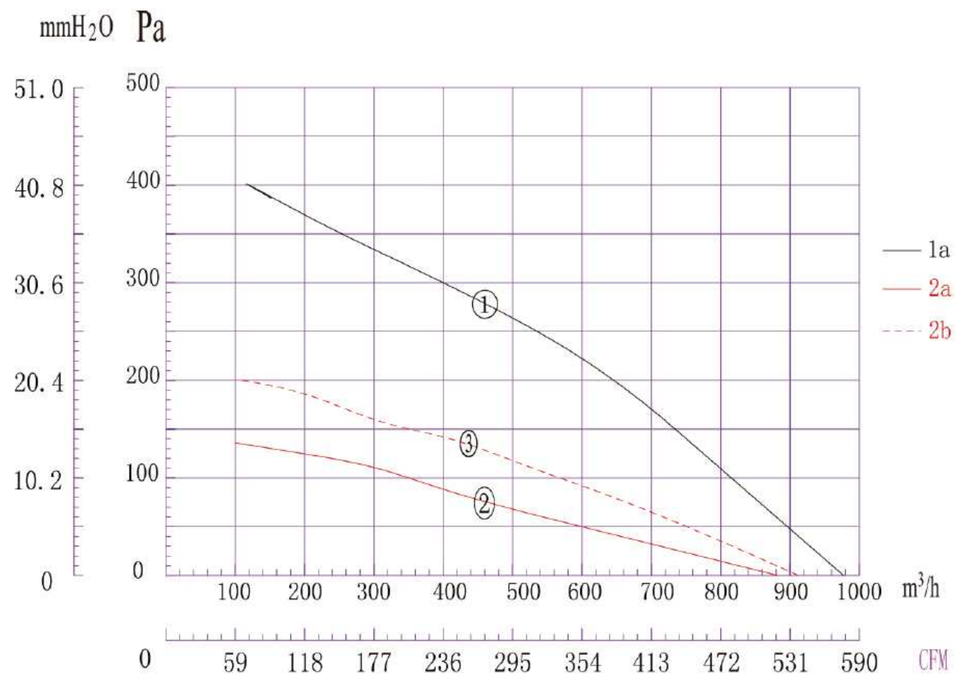

Product Drawing

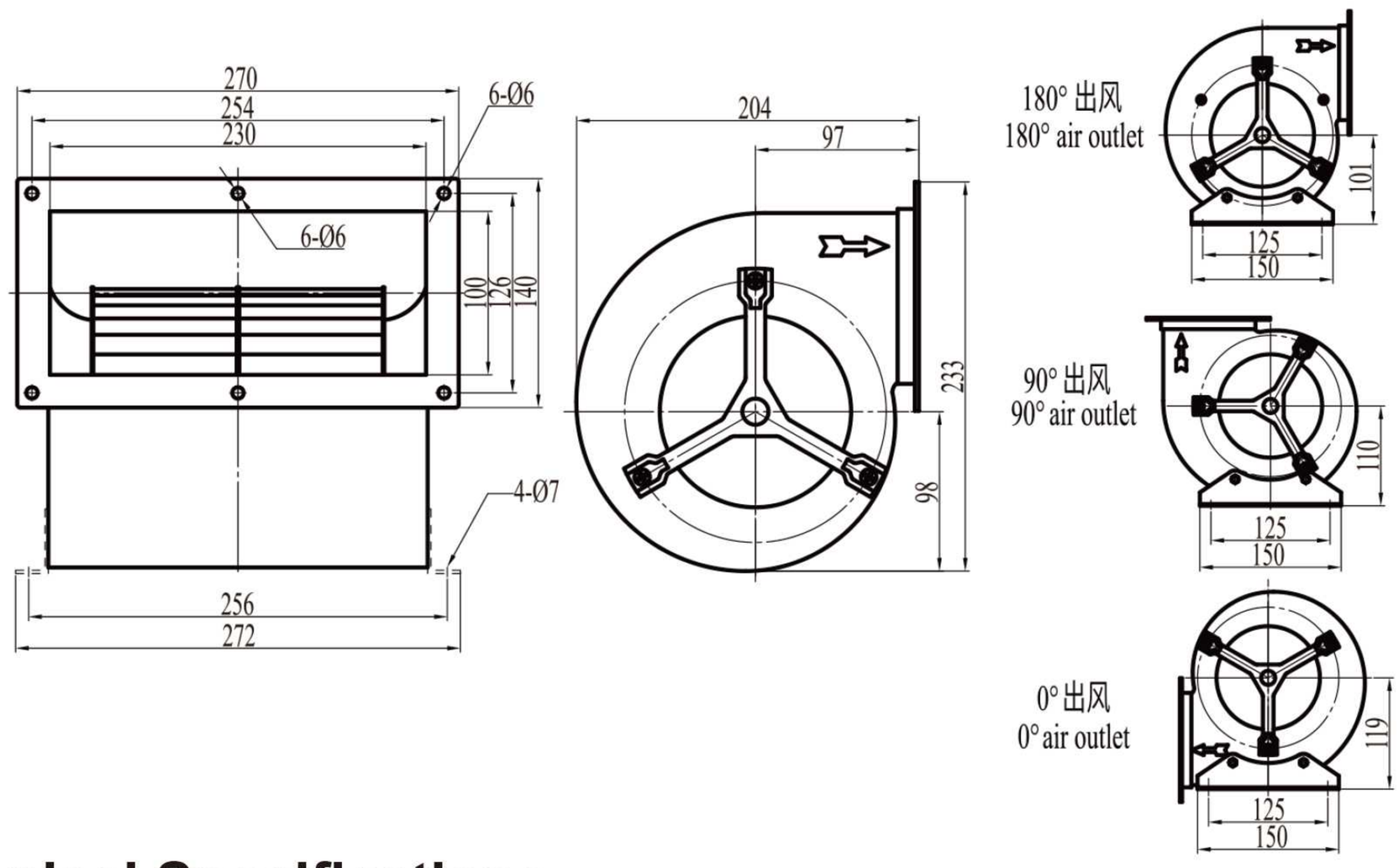

Technical Specifications

Model	Voltage	Frequency	Current	Power	Speed	Air Flow	Noise Level	Capacitor	Curve
LWFA4E-133DS-04	220V	50Hz	1.42A	305W	2100RPM	970m³/h	63dB(A)	20μF	①
LWFA4E-133DS-05	220V	50Hz	0.38A	82W	1425RPM	873m³/h	53dB(A)	3μF	②
LWFA4E-133DS-06	230V	60Hz	0.55A	125W	1650RPM	910m³/h	55dB(A)	4μF	③

LONGWELL
Turn to Experts - HVAC

AC Forward Centrifugal Blower

Product Characteristic

∅146

- Type of Protection : IP54
- Insulation Class: “B” “F”
- Mode of operation: S1
- Bearings: Maintenance-free ball bearings
- Blades: Galvanized sheet
- Perm.amb.temp: -40~+60℃

Flow Rate Curve

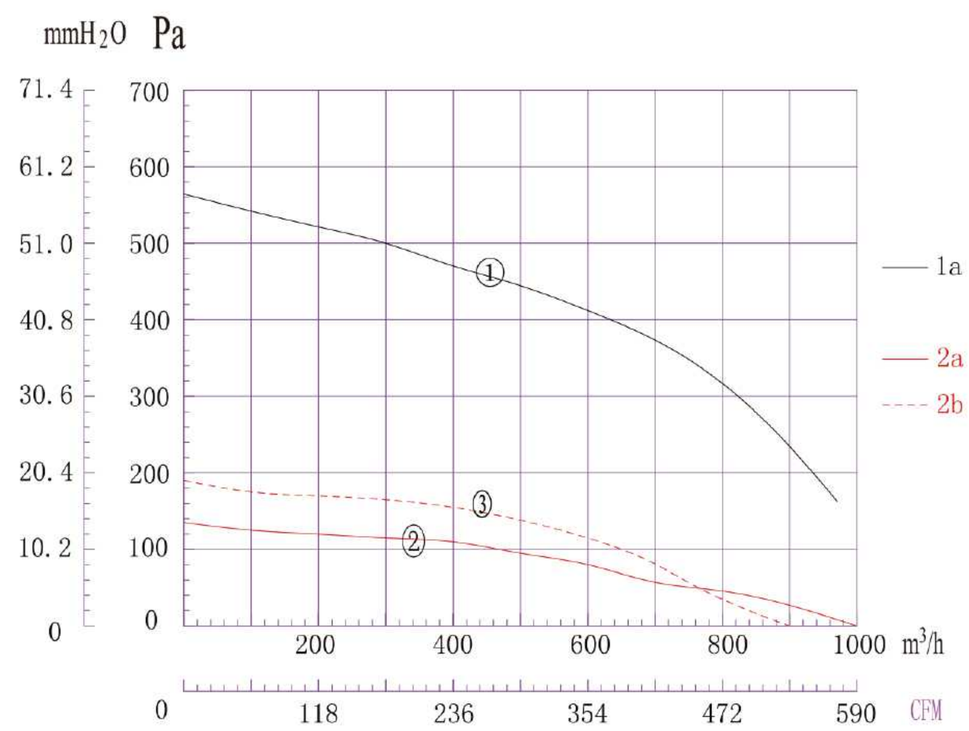

Product Drawing

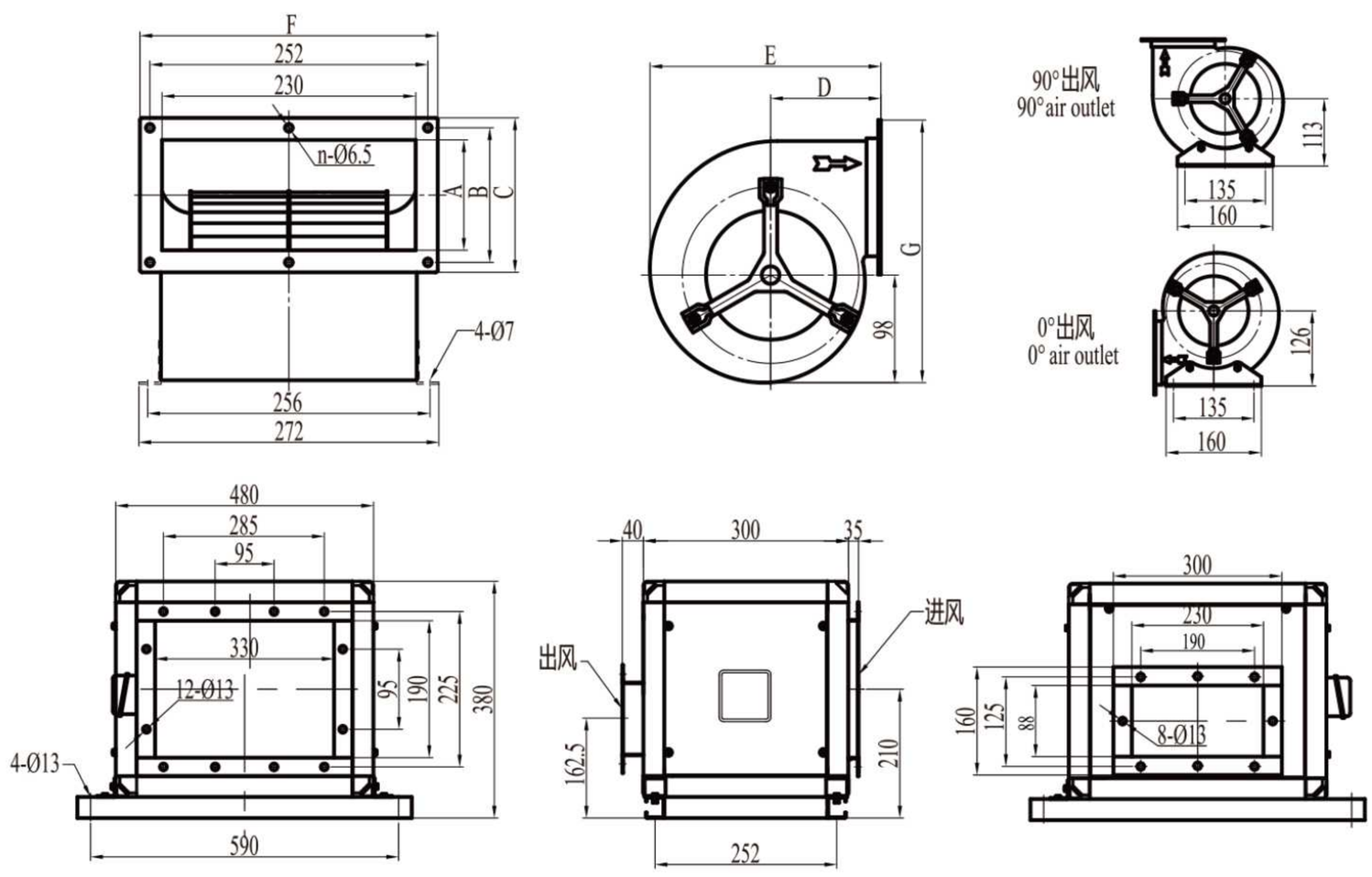

Technical Specifications

Model	Voltage	Frequency	Current	Power	Speed	Air Flow	Noise	Capacitor	Curve	A	B	C	D	E	F	G	F
LWFA2E-146DS-01	220V	50Hz	1.30A	350W	2000RPM	970m³/h	63dB(A)	10μF	①	88	105	120	105	230	266	250	4
LWFA4E-146DS-01	220V	50Hz	0.50A	110W	1360RPM	1000m³/h	54dB(A)	4μF	②	100	122	140	100	215	270	238	6
LWFA4E-146DS-02	230V	60Hz	1.00A	220W	1600RPM	900m³/h	56dB(A)	5μF	③								

Ningbo Longwell Electric Technology CO, LTD
https://zjlongwell.en.alibaba.com TEL:+0086 183 5827 4663

AC Forward Centrifugal Blower

Product Characteristic

Ø160

- Type of Protection : IP54
- Insulation Class: "B" "F"
- Mode of operation: S1
- Bearings: Maintenance-free ball bearings
- Blades: Galvanized sheet
- Perm.amb.temp: -40~+60℃

Flow Rate Curve

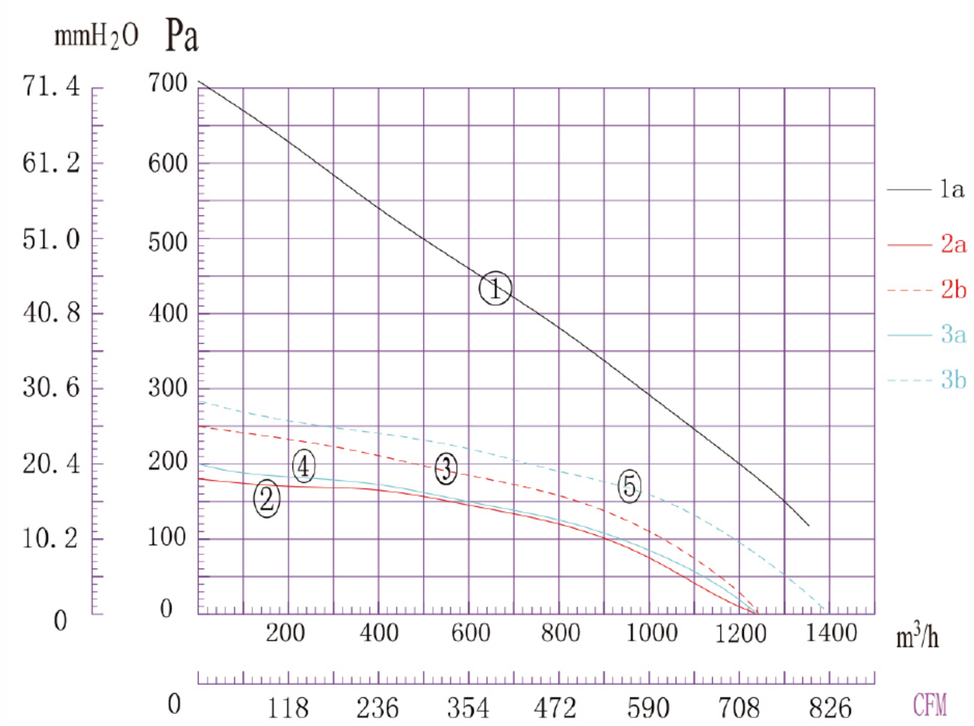

Product Drawing

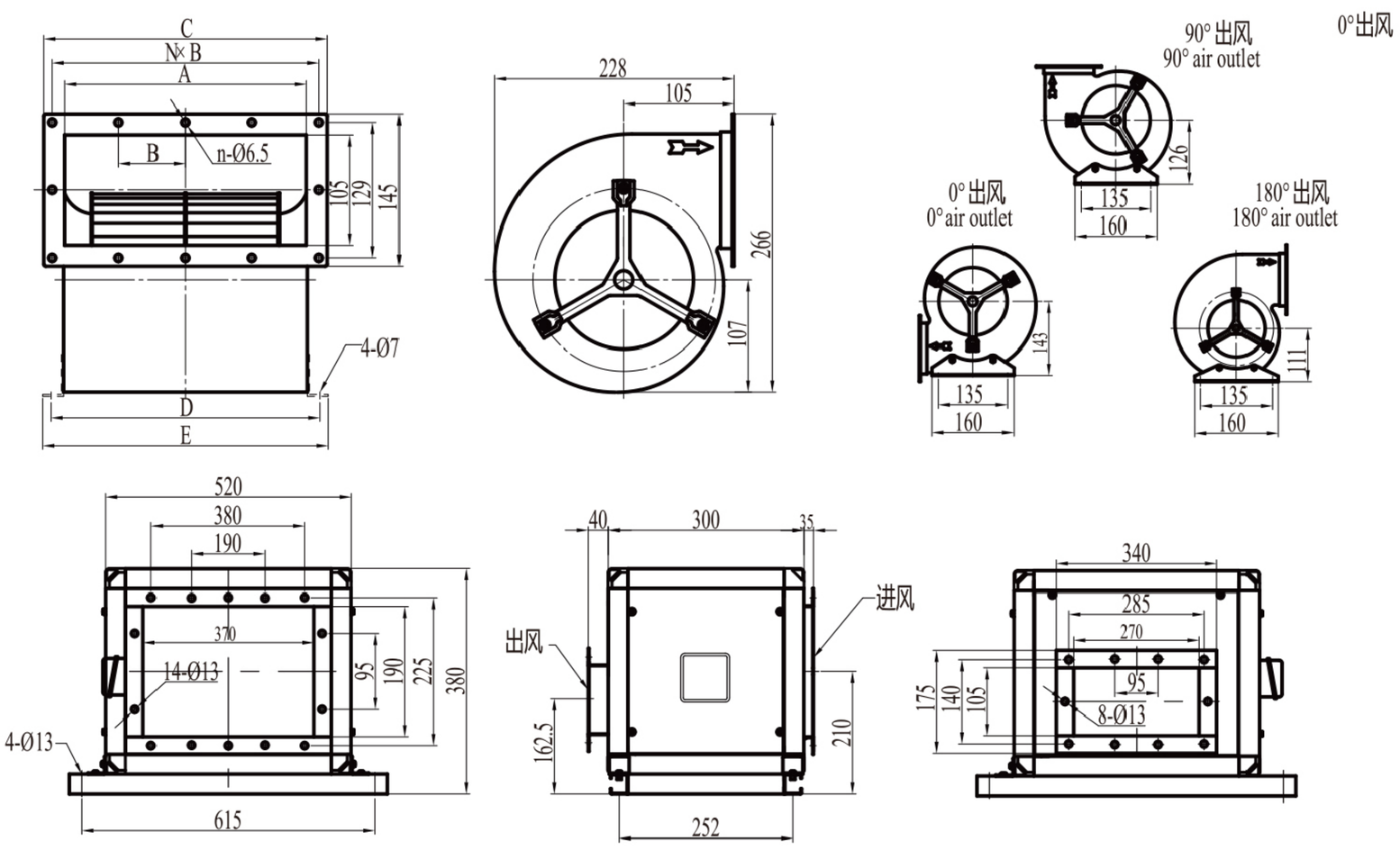

Technical Specifications

Model	Voltage	Frequency	Current	Power	Speed	Air Flow	Noise	Capacitor	Curve	A	B	C	D	E	n	N
LWFA2E-160DS-01	220V	50Hz	2.30A	410W	1850RPM	1300m³/h	65dB(A)	18μF	①	270	73.5	310	296	312	12	4
LWFA4E-160DS-02	220V	50Hz	0.75A	150W	1300RPM	1240m³/h	64dB(A)	4μF	②	230	63.5	270	256	272	8	2
LWFA4E-160DS-03	230V	60Hz	1.30A	250W	1350RPM	1260m³/h	65dB(A)	5μF	③							
LWFA4E-160DS-04	220V	50Hz	0.80A	185W	1380RPM	1240m³/h	65dB(A)	6μF	④	270	73.5	310	296	312	12	4
LWFA4E-160DS-05	230V	60Hz	1.00A	235W	1570RPM	1400m³/h	68dB(A)	5μF	⑤							

LONGWELL
Turn to Experts - HVAC

AC Forward Centrifugal Blower

Product Characteristic

∅180

- Type of Protection : IP54
- Insulation Class: “B” “F”
- Mode of operation: S1
- Bearings: Maintenance-free ball bearings
- Blades: Galvanized sheet
- Perm.amb.temp: -40~+60℃

Flow Rate Curve

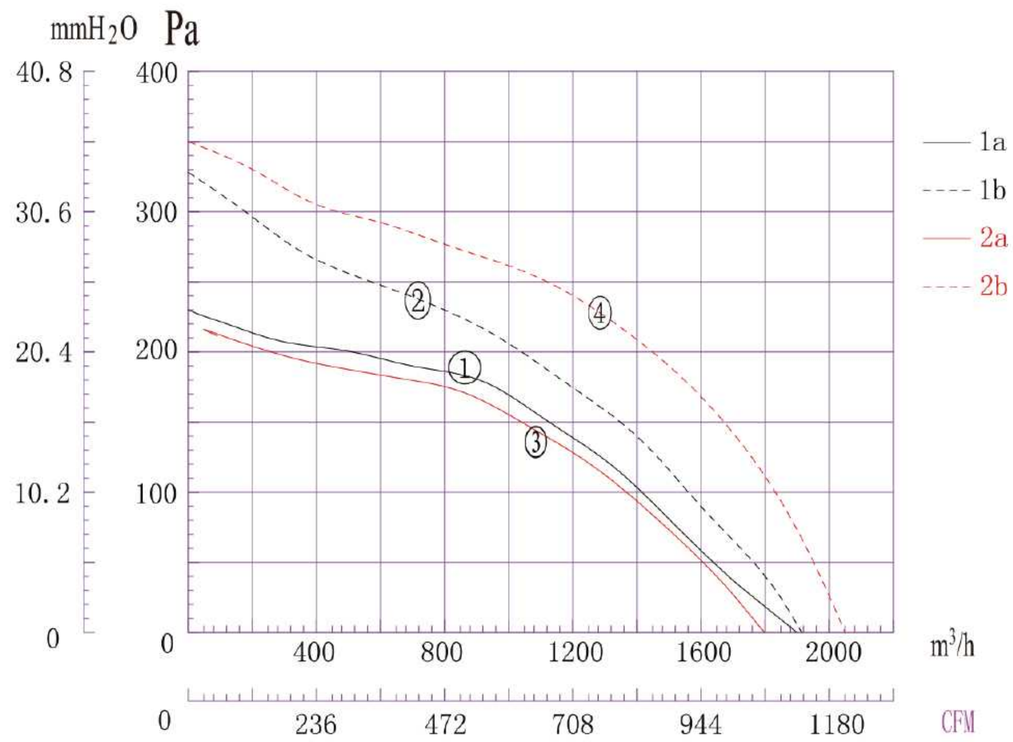

Product Drawing

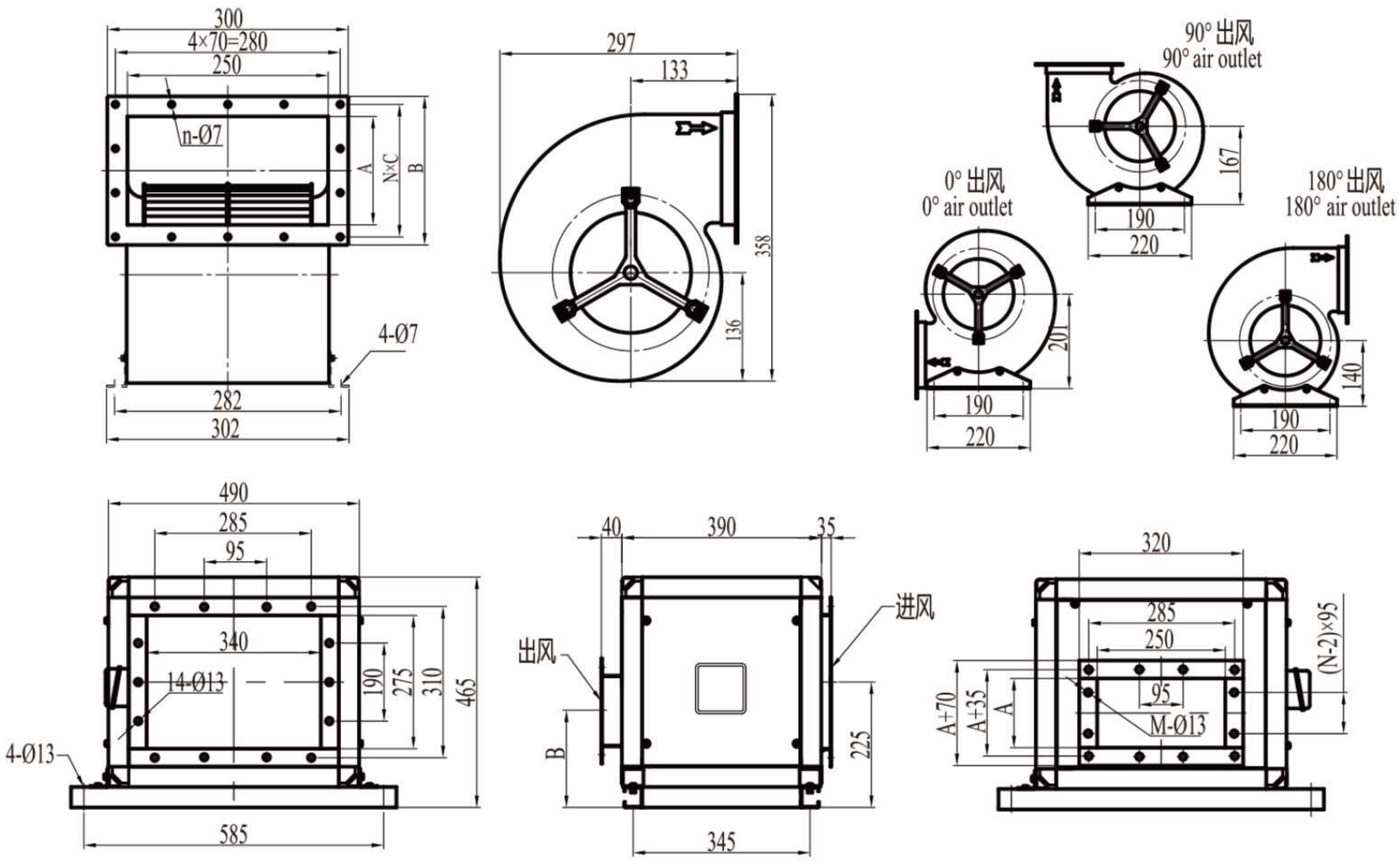

Technical Specifications

Model	Voltage	Frequency	Current	Power	Speed	Air Flow	Noise Level	Capacitor	Curve	A	B	C	E	n	N
LWFA4D-180DS-01	380V	50Hz	0.51A	240W	1350RPM	1900m³/h	63dB(A)	/	①	225	275	63.5	4	16	12
LWFA4D-180DS-02	400V	60Hz	0.57A	330W	1480RPM	1980m³/h	63dB(A)	/	②						
LWFA4E-180DS-03	220V	50Hz	1.30A	250W	1220RPM	1800m³/h	66dB(A)	8μF	③	135	185	82.5	2	12	10
LWFA4E-180DS-04	230V	60Hz	2.20A	490W	1650RPM	2050m³/h	67dB(A)	10μF	④						

Ningbo Longwell Electric Technology CO, LTD
https://zjlongwell.en.alibaba.com TEL:+0086 183 5827 4663

AC Forward Centrifugal Blower

Product Characteristic

∅200

- Type of Protection : IP54
- Insulation Class: “B” “F”
- Mode of operation: S1
- Bearings: Maintenance-free ball bearings
- Blades: Galvanized sheet
- Perm.amb.temp: -40~+60℃

Flow Rate Curve

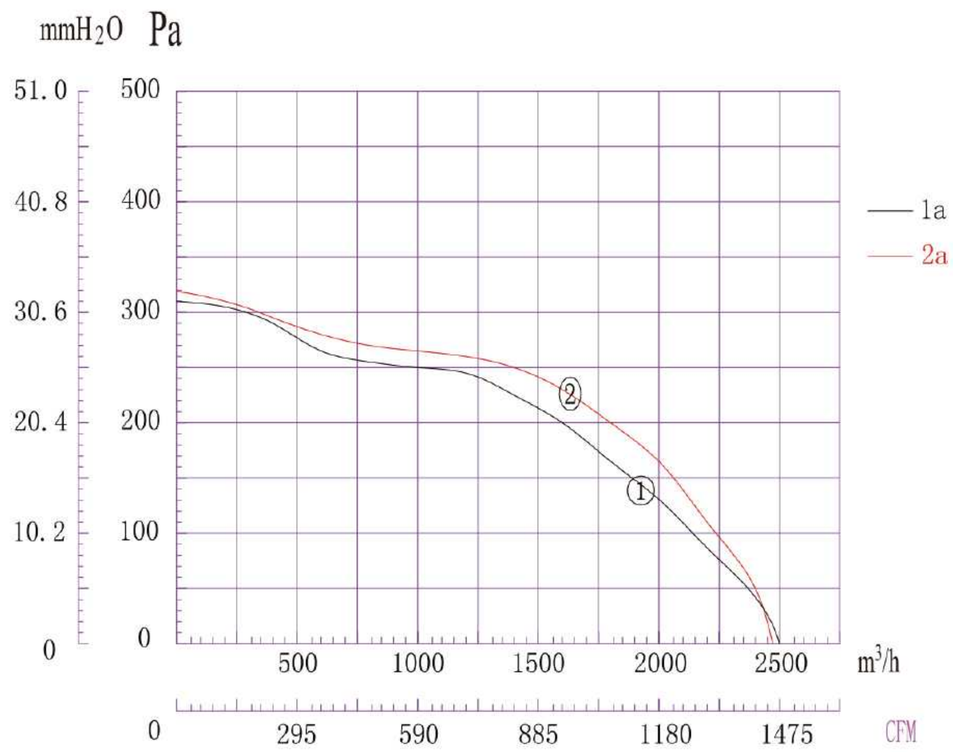

Product Drawing

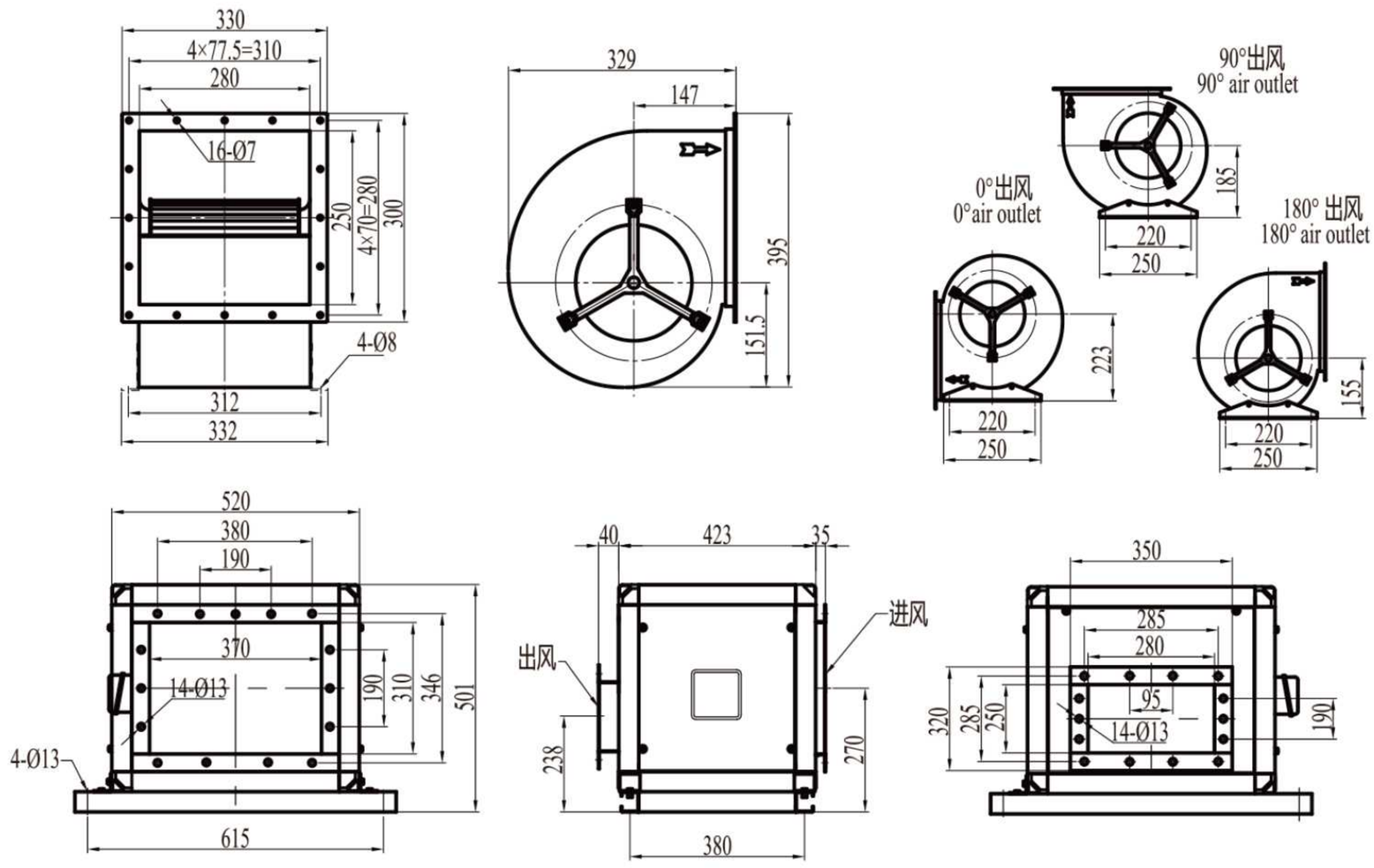

Technical Specifications

Model	Voltage	Frequency	Current	Power	Speed	Air Flow	Noise Level	Capacitor	Curve
LWFA4D-200DS-01	380V	50Hz	0.65A	390W	1210RPM	2500m³/h	64dB(A)	/	①
LWFA4E-200DS-02	220V	50Hz	2.05A	430W	1050RPM	2450m³/h	61dB(A)	12μF	②

LONGWELL
Turn to Experts - HVAC

AC Forward Centrifugal Blower

Product Characteristic

Ø225

- Type of Protection : IP54
- Insulation Class: "B" "F"
- Mode of operation: S1
- Bearings: Maintenance-free ball bearings
- Blades: Galvanized sheet
- Perm.amb.temp: -40~+60℃

Flow Rate Curve

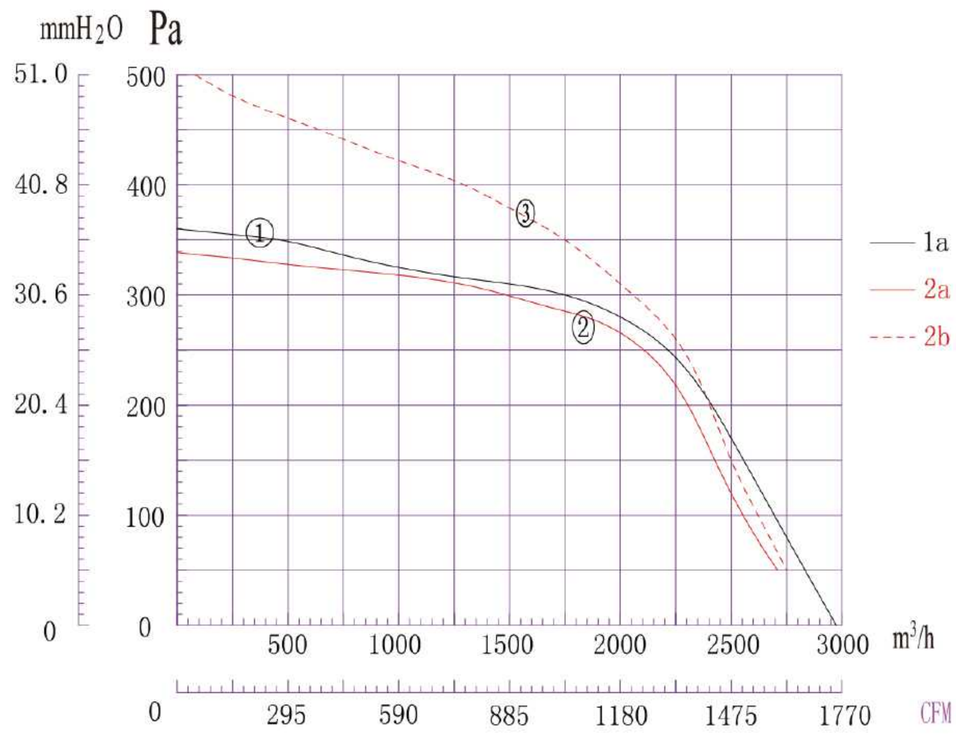

Product Drawing

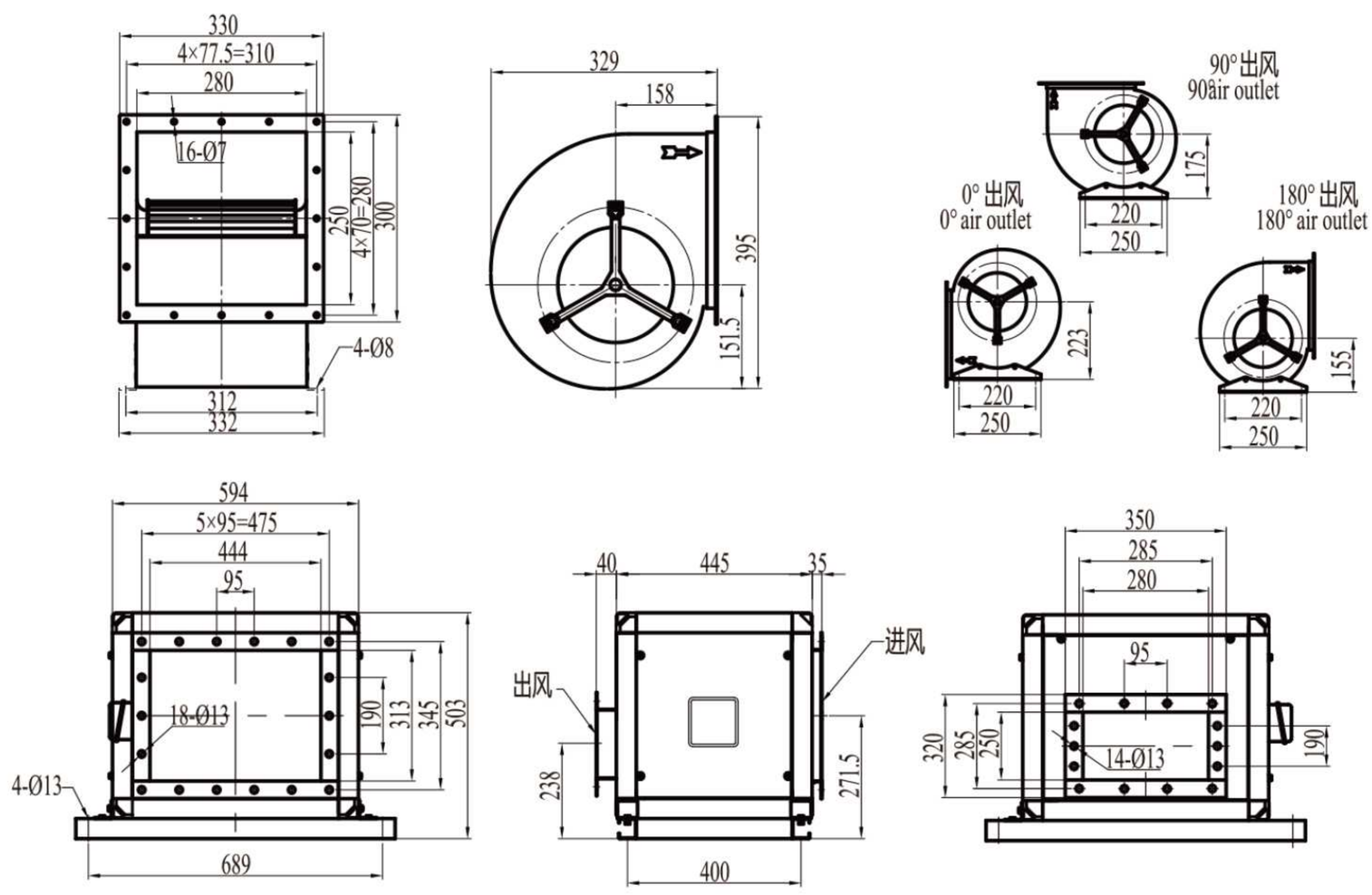

Technical Specifications

Model	Voltage	Frequency	Current	Power	Speed	Air Flow	Noise Level	Capacitor	Curve
LWFA4D-225DS-01	380V	50Hz	1.75A	450W	1320RPM	2950m³/h	65dB(A)	/	①
LWFA4E-225DS-02	220V	50Hz	2.55A	625W	1050RPM	2800m³/h	66dB(A)	12μF	②
LWFA4E-225DS-03	230V	60Hz	4.60A	1000W	1650RPM	2750m³/h	63dB(A)	18μF	③

Ningbo Longwell Electric Technology CO, LTD
https://zjlongwell.en.alibaba.com TEL:+0086 183 5827 4663

AC Forward Centrifugal Blower

Product Characteristic

Ø225

- Type of Protection : IP54
- Insulation Class: “B” “F”
- Mode of operation: S1
- Bearings: Maintenance-free ball bearings
- Blades: Galvanized sheet
- Perm.amb.temp: -40~+60℃

Flow Rate Curve

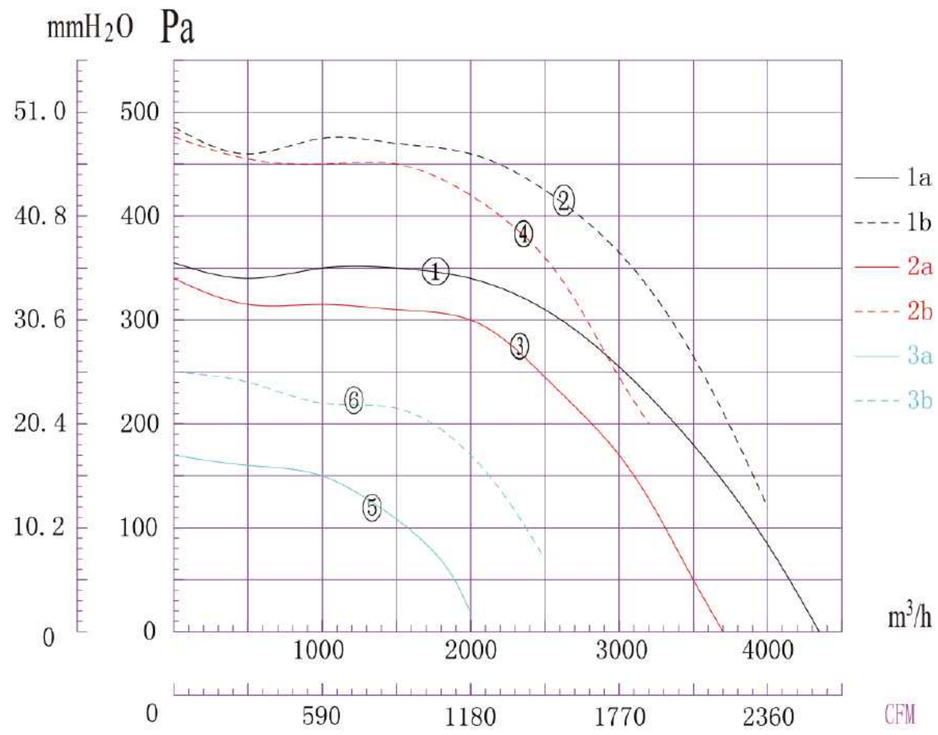

Product Drawing

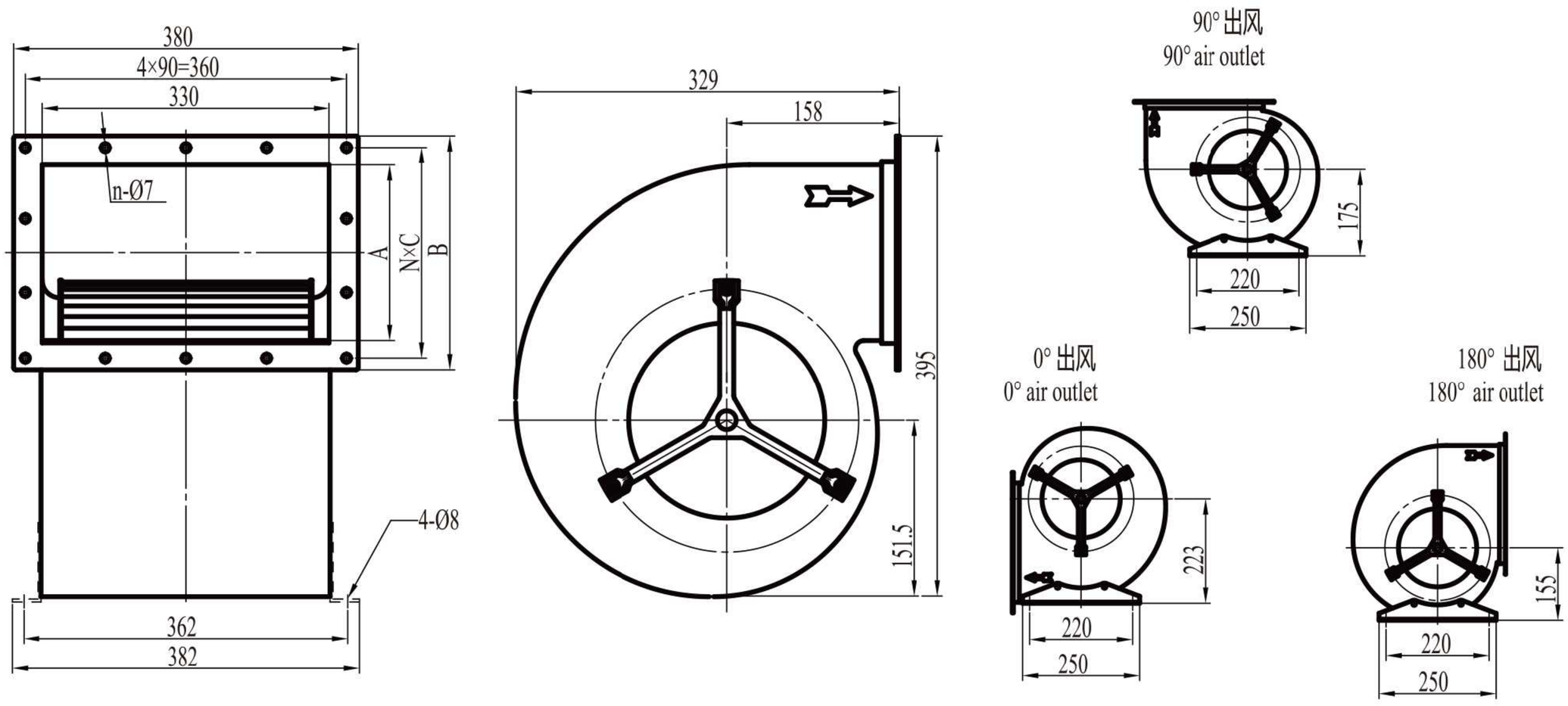

Technical Specifications

Model	Voltage	Frequency	Current	Power	Speed	Air Flow	Noise Level	Capacitor	Curve	A	B	C	N	n
LWFA4D-225DS-04	380V	50Hz	1.55A	740W	1250RPM	4350m³/h	78dB(A)	/	①	250	300	70	4	16
LWFA4D-225DS-05	400V	60Hz	2.10A	1100W	1580RPM	3900m³/h	75dB(A)	/	②					
LWFA4E-225DS-06	220V	50Hz	2.90A	600W	1320RPM	3700m³/h	75dB(A)	25μF	③	150	200	90	2	12
LWFA4E-225DS-07	230V	60Hz	4.70A	970W	1700RPM	3200m³/h	72dB(A)	20μF	④					
LWFA6E-225DS-08	220V	50Hz	1.15A	265W	900RPM	2000m³/h	61dB(A)	10μF	⑤	250	300	70	4	16
LWFA6E-225DS-09	230V	60Hz	2.40A	500W	1000RPM	2500m³/h	61dB(A)	8μF	⑥					

LONGWELL
Turn to Experts - HVAC

AC Forward Centrifugal Blower

Product Characteristic

∅250

- Type of Protection : IP54
- Insulation Class: “B” “F”
- Mode of operation: S1
- Bearings: Maintenance-free ball bearings
- Blades: Galvanized sheet
- Perm.amb.temp: -40~+60℃

Flow Rate Curve

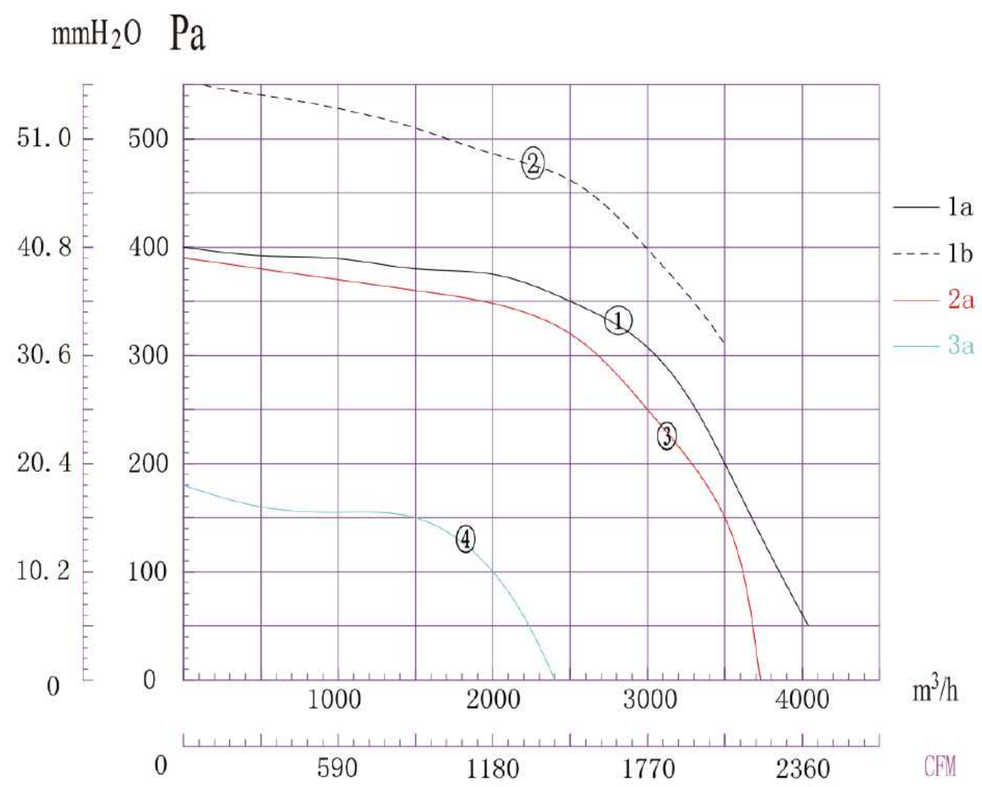

Product Drawing

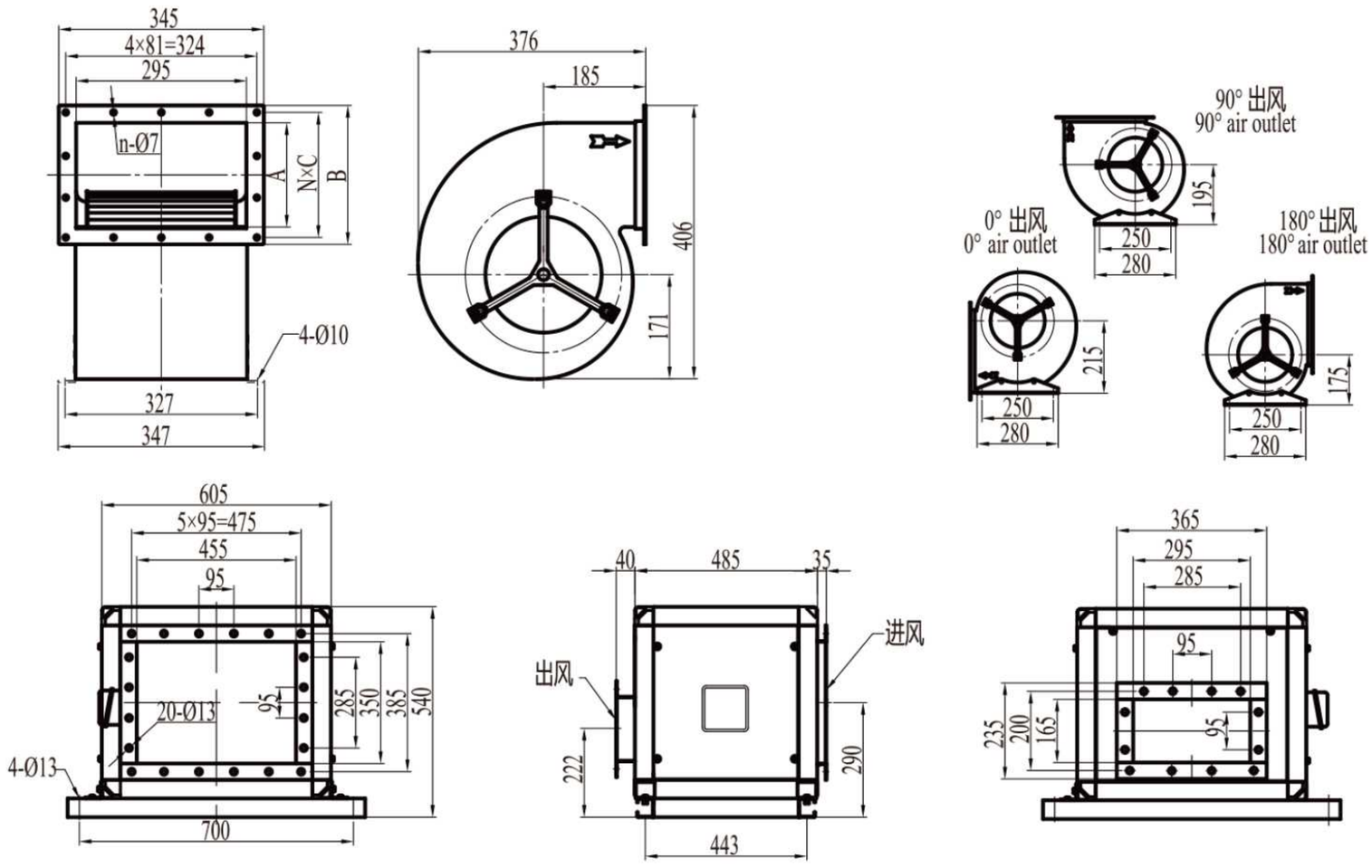

Technical Specifications

Model	Voltage	Frequency	Current	Power	Speed	Air Flow	Noise Level	Capacitor	Curve	A	B	C	N	n
LWFA4D-250DS-01	380V	50Hz	2.10A	1200W	1250RPM	4040m³/h	77dB(A)	/	①	260	309.5	72.5	4	16
LWFA4D-250DS-02	400V	60Hz	2.00A	1200W	1420RPM	3500m³/h	73dB(A)	/	②					
LWFA4E-250DS-03	220V	50Hz	4.00A	850W	1380RPM	3730m³/h	75dB(A)	25μF	③	165	214.5	65	3	14
LWFA6E-250DS-04	220V	50Hz	1.78A	410W	900RPM	2350m³/h	67dB(A)	15μF	④					

Ningbo Longwell Electric Technology CO, LTD
https://zjlongwell.en.alibaba.com TEL:+0086 183 5827 4663

AC Forward Centrifugal Blower

Product Characteristic

Ø250

- Type of Protection : IP54
- Insulation Class: "B" "F"
- Mode of operation: S1
- Bearings: Maintenance-free ball bearings
- Blades: Galvanized sheet
- Perm.amb.temp: -40~+60℃

Flow Rate Curve

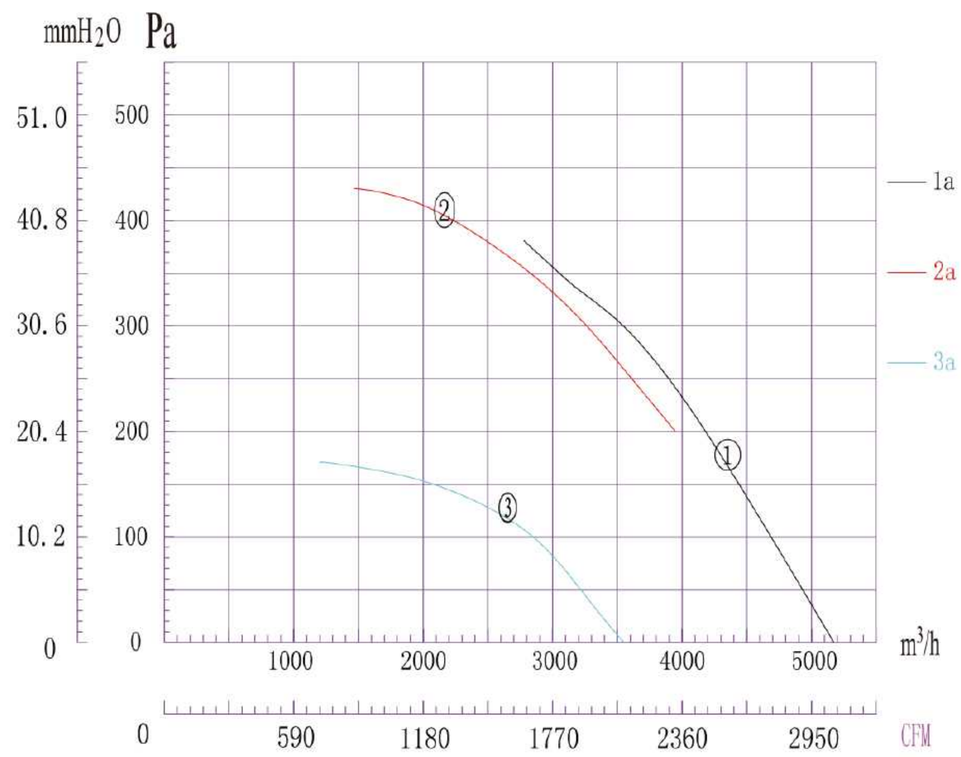

Product Drawing

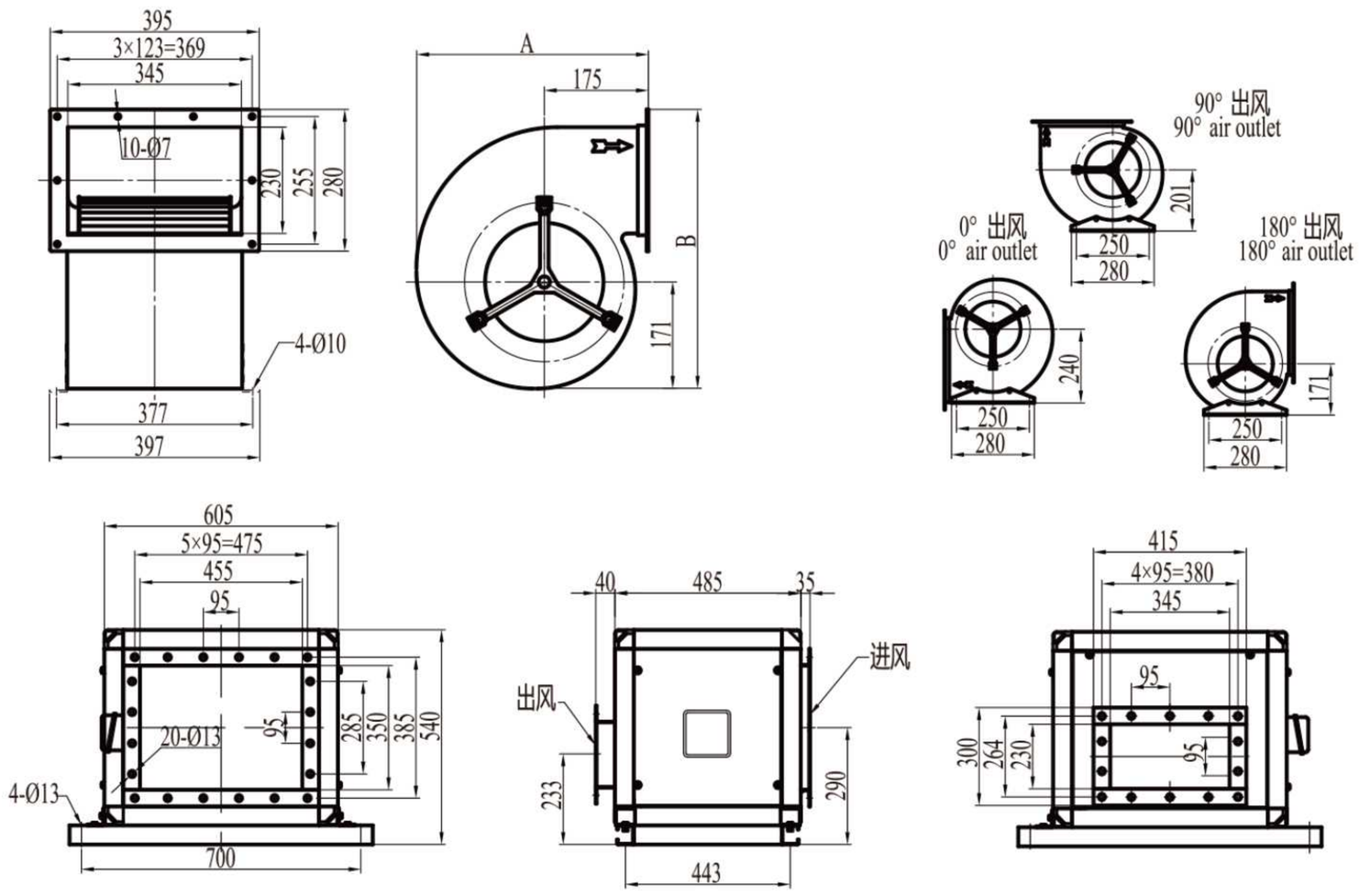

Technical Specifications

Model	Voltage	Frequency	Current	Power	Speed	Air Flow	Noise Level	Capacitor	Curve	A	B
LWFA4D-250DS-05	380V	50Hz	2.50A	1380W	1360RPM	4200m³/h	77dB(A)	/	①	374	426
LWFA4E-250DS-06	220V	50Hz	5.30A	1000W	1390RPM	3750m³/h	73dB(A)	22μF	②	382	413
LWFA6D-250DS-07	380V	50Hz	1.30A	500W	900RPM	2850m³/h	68dB(A)	/	③	374	426

LONGWELL
Turn to Experts - HVAC

AC Forward Centrifugal Blower

Product Characteristic

∅280

- Type of Protection : IP54
- Insulation Class: “B” “F”
- Mode of operation: S1
- Bearings: Maintenance-free ball bearings
- Blades: Galvanized sheet
- Perm.amb.temp: -40~+60℃

Flow Rate Curve

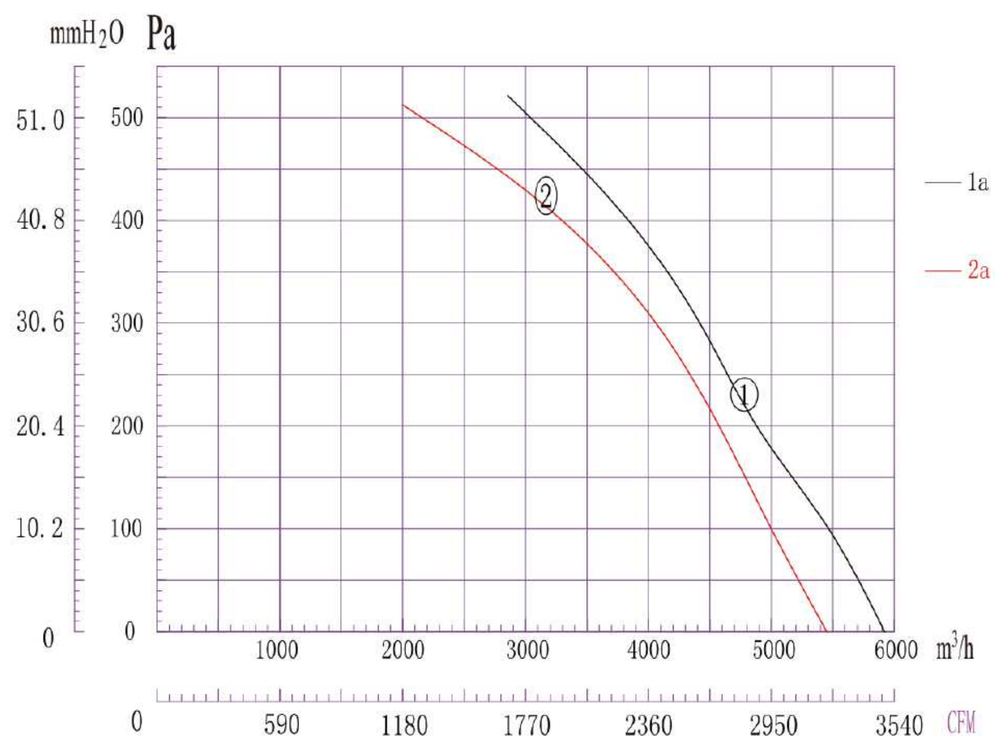

Product Drawing

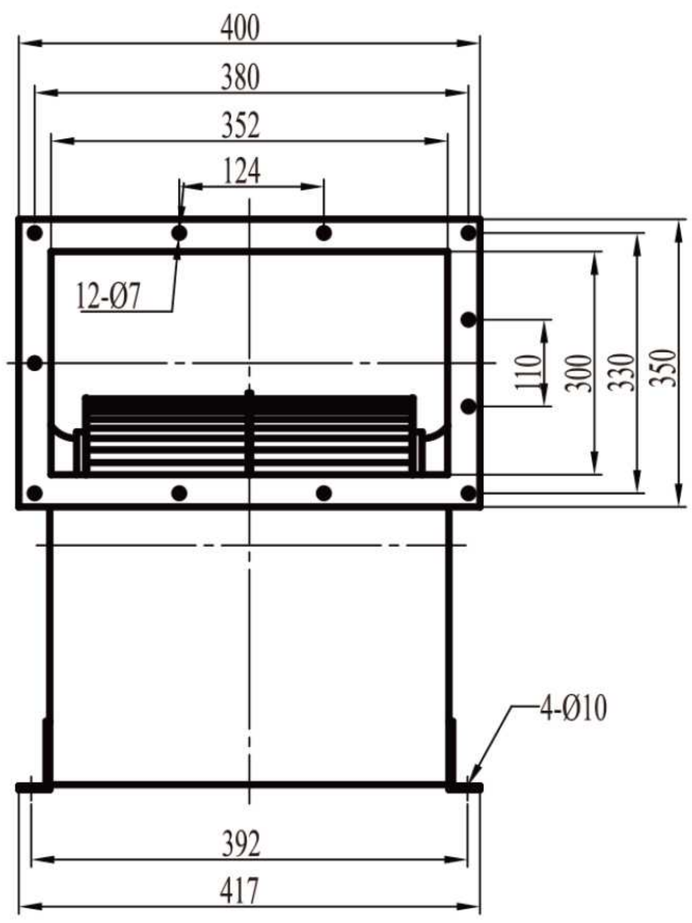

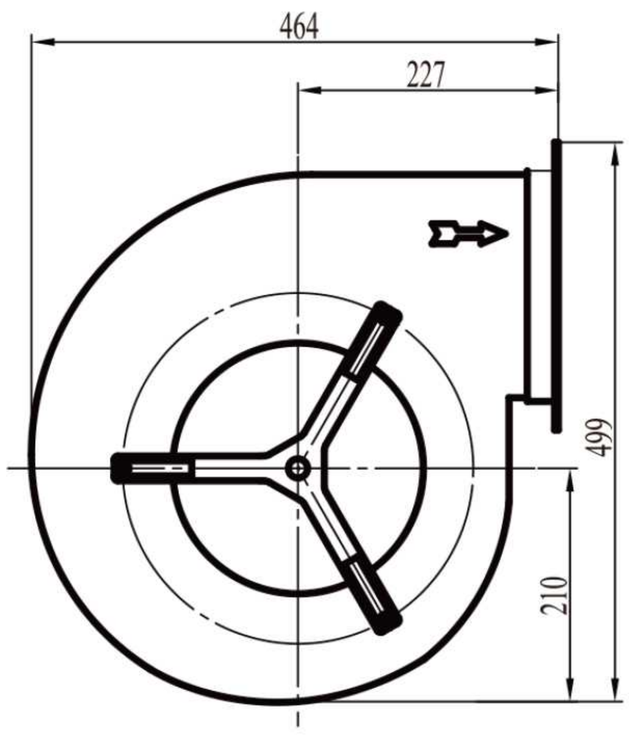

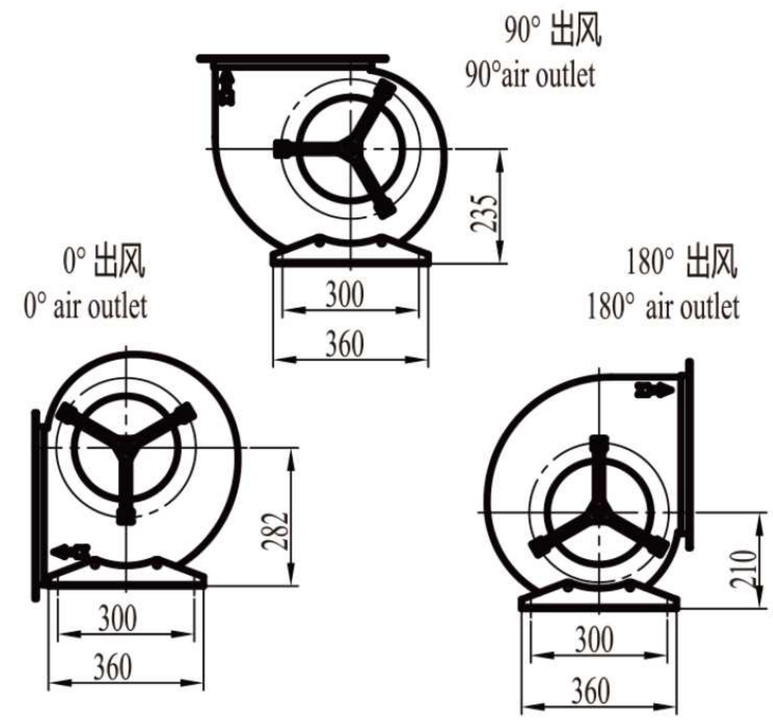

Technical Specifications

Model	Voltage	Frequency	Current	Power	Speed	Air Flow	Noise Level	Capacitor	Curve
LWFA4D-280DS-01	380V	50Hz	3.30A	1550W	1420RPM	5800m³/h	75dB(A)	/	①
LWFA4E-280DS-02	220V	50Hz	6.40A	1500W	1330RPM	5400m³/h	73dB(A)	35μF	②

Ningbo Longwell Electric Technology CO, LTD
https://zjlongwell.en.alibaba.com TEL:+0086 183 5827 4663

AC Forward Centrifugal Blower

Product Characteristic

∅300

- Type of Protection : IP54
- Insulation Class: “B” “F”
- Mode of operation: S1
- Bearings: Maintenance-free ball bearings
- Blades: Galvanized sheet
- Perm.amb.temp: -40~+60℃

Flow Rate Curve

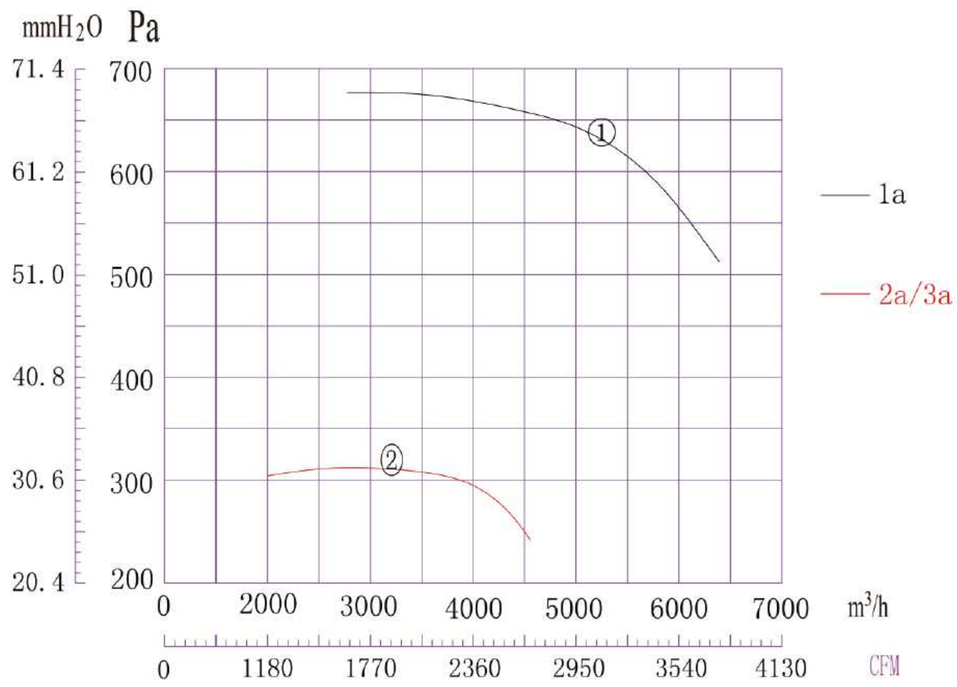

Product Drawing

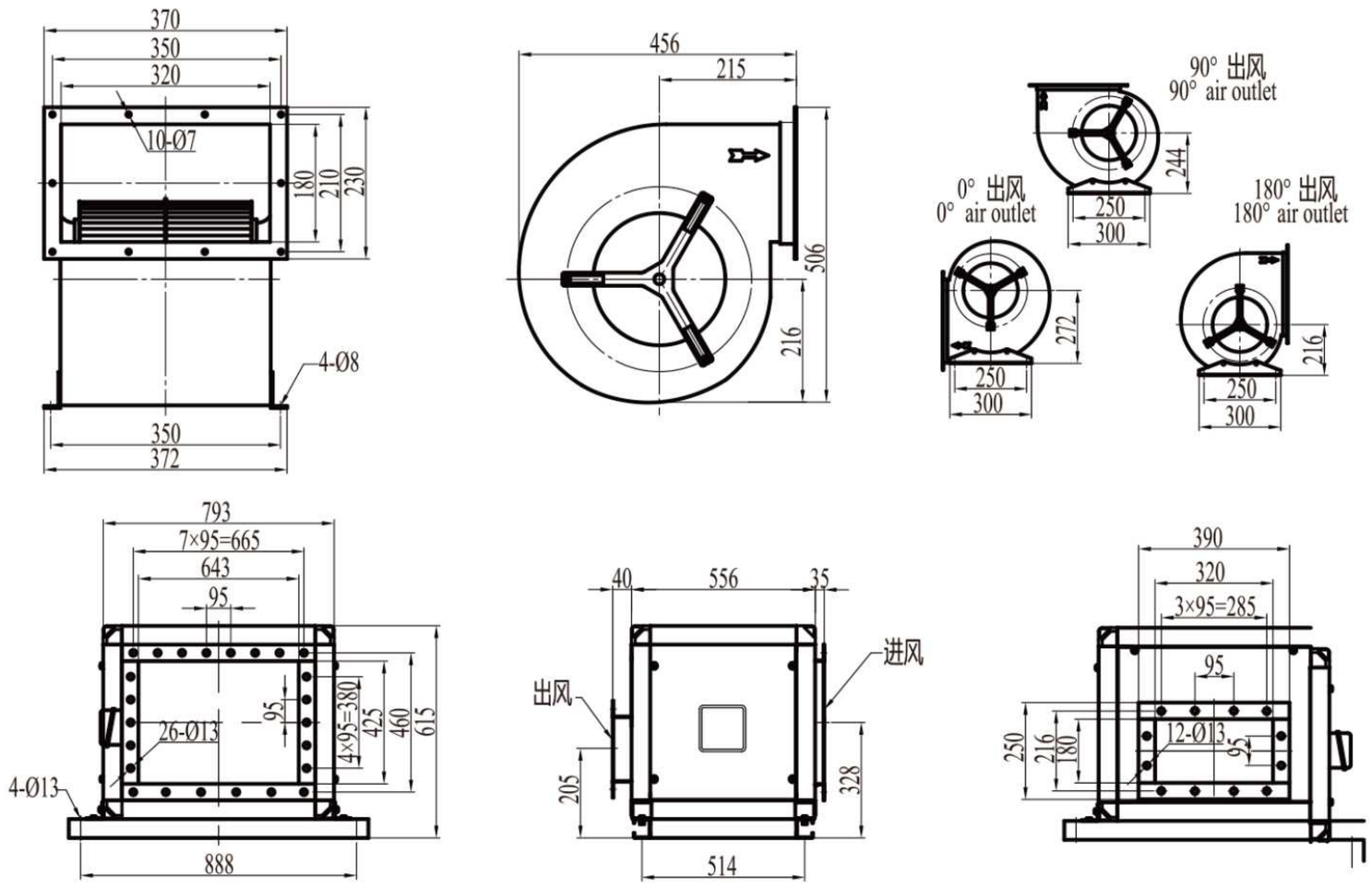

Technical Specifications

Model	Voltage	Frequency	Current	Power	Speed	Air Flow	Noise Level	Capacitor	Curve
LWFA4D-300DS-01	380V	50Hz	3.00A	1800W	1360RPM	5700m³/h	78dB(A)	/	①
LWFA6D-300DS-02	380V	50Hz	1.60A	550W	900RPM	3500m³/h	66dB(A)	/	②
LWFA6E-300DS-03	220V	50Hz	3.50A	550W	920RPM	3500m³/h	66dB(A)	20μF	②

LONGWELL
Turn to Experts - HVAC

AC Forward Centrifugal Blower

Product Characteristic

Ø355

- Type of Protection : IP54
- Insulation Class: “B” “F”
- Mode of operation: S1
- Bearings: Maintenance-free ball bearings
- Blades: Galvanized sheet
- Perm.amb.temp: -40~+60℃

Flow Rate Curve

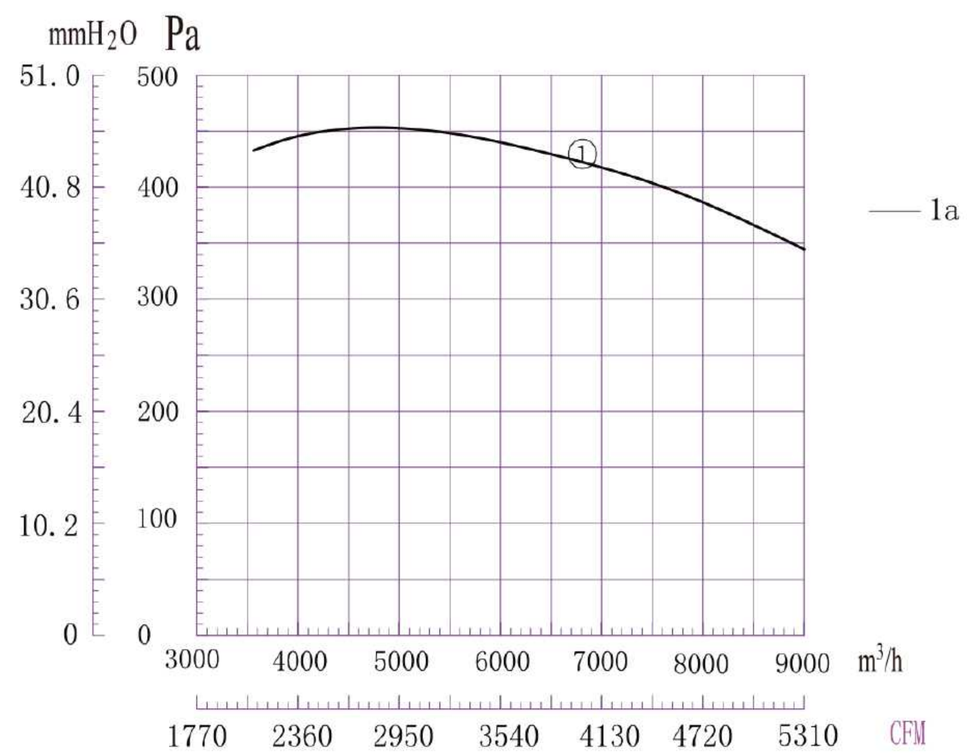

Product Drawing

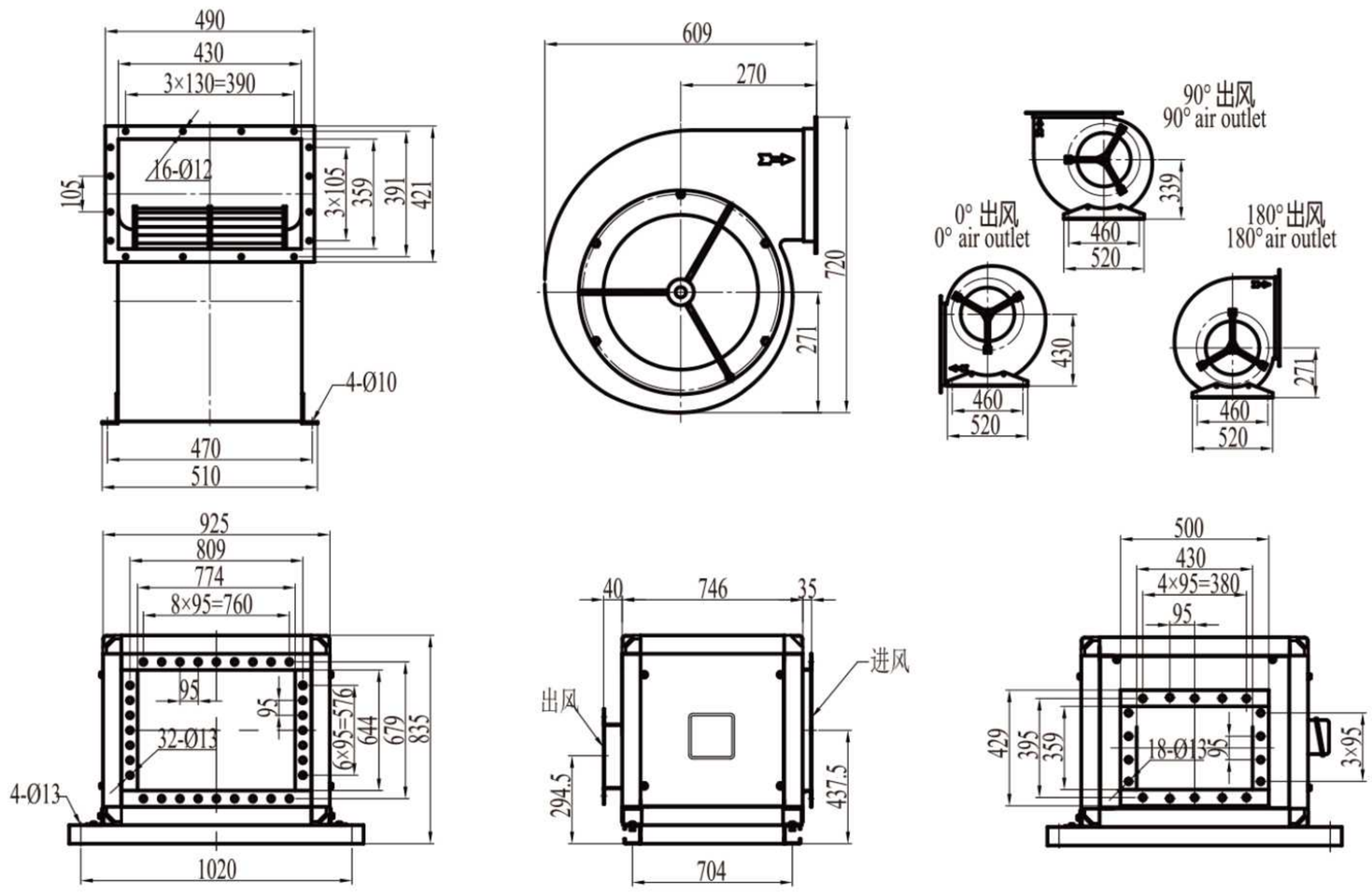

Technical Specifications

Model	Voltage	Frequency	Current	Power	Speed	Air Flow	Noise Level	Capacitor	Curve
LWFA6D-355DS-01	380V	50Hz	3.90A	1800W	930RPM	8000m³/h	70dB(A)	/	①